OH46F WALLMOUNT (PORTRAIT / LANDSCAPE)
- DIMENSIONS -

Rev: 01	Date: 13/09/2021
Pag.: 1/1	Code: 5750

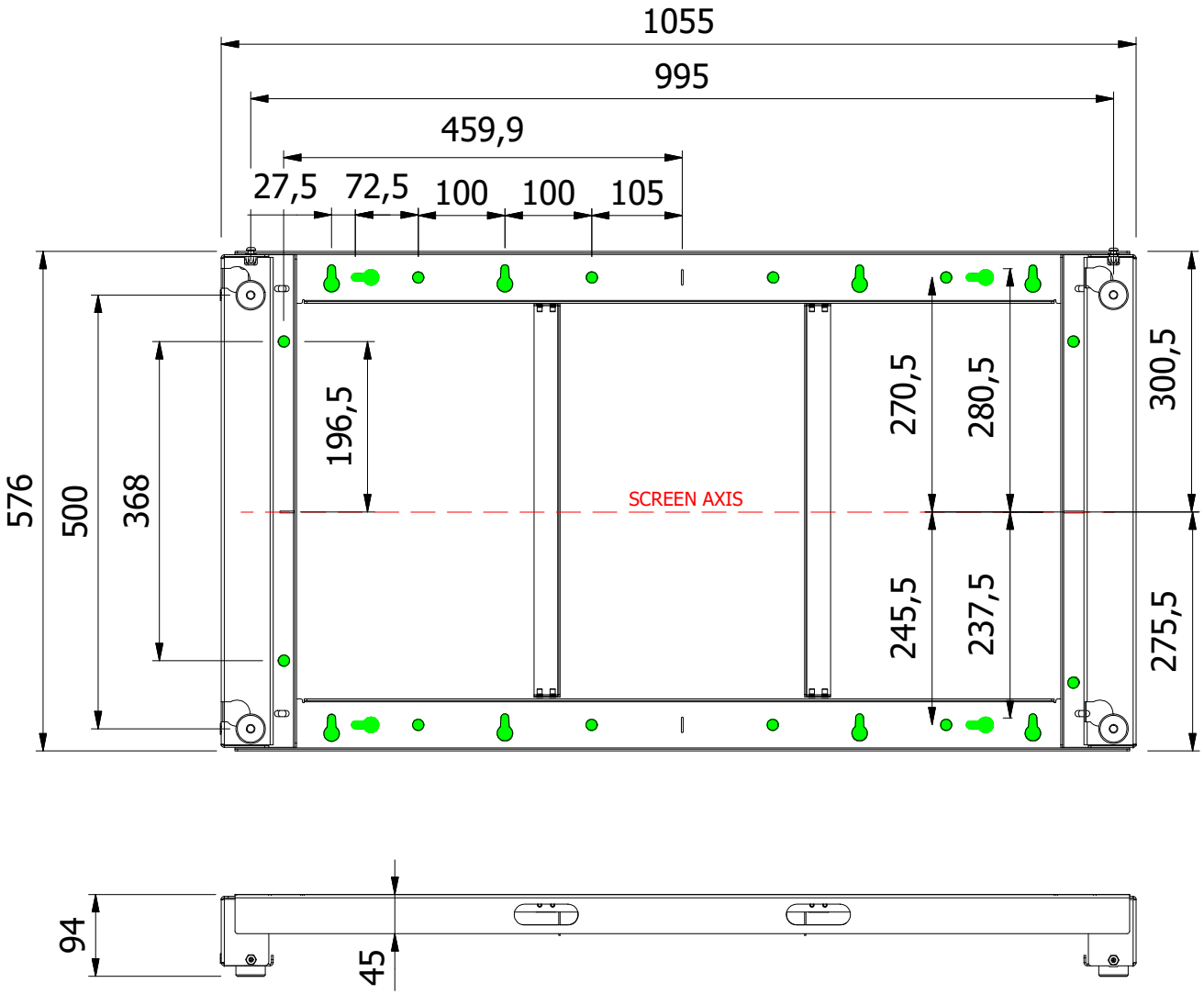

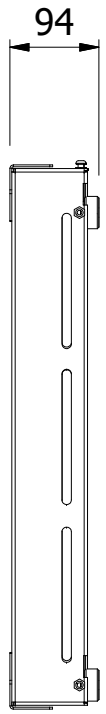

WEIGHT MAX LOAD: 48 Kg

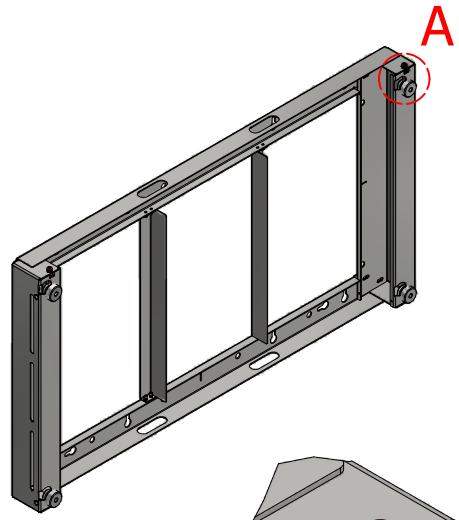

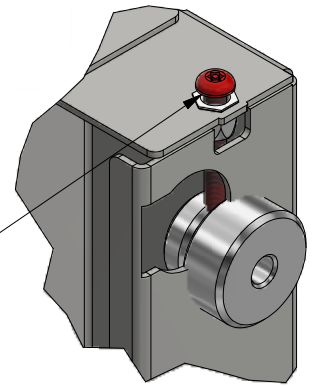

N. 2 SAFETY AND ANTI-THEFT SCREWS

Detail A

The green holes are used for wall fixing