ROLINE Adjustable Touch Screen Monitor Stand, 17–27 inch, max. 6.5 kg, black

Product No.	17.03.1216
Manufacturer	ROLINE
Manufacturer No.	17.03.1216
EAN (single piece)	7630049643567



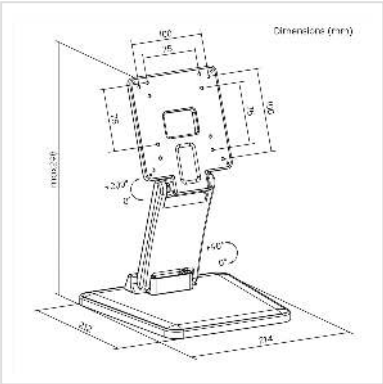



This ROLINE Monitor Touch Screen Stand supports screens up to 6.5 kg with 17" to 27" and VESA 75x75 and VESA 100x100!

• Cost-effective mounting solution that boosts accessibility, ergonomic comfort, and productivity at the same time
• Ideal for 17"-27" monitors
• Helps to achieve optimal viewing angles in different applications
• Enhanced tilt adjustment allows a good positioning of the touchscreen - comfortably for drawing, writing, or any other detailed work.
• Its sturdy base provides stability, preventing wobbling during touchscreens interactions.
• Weight capacity: up to 6.5 kg
• Meets VESA 75x75, 100x100
• Fits screen sizes: < 68.58cm (27")

Technical specifications	
Manufacturer	ROLINE
Product group	LCD-Monitor arms
Product type	Monitor Arms, Desk Clamp
Colour	black
Scope of delivery	Monitor Stand, Installation Instructions

Maximum weight capacity	6.5 kg
Adjustments	Mechanically
Inclinable	yes
Height adjustable	yes
Number of monitors	1
Max. Screen diagonal (cm)	68.58 cm
Max. Screen diagonal (inch)	27 inch
Min. Screen diagonal (cm)	43.18 cm
Min. Screen diagonal (inch)	17 inch
VESA 75 x 75 mm	yes
VESA 100 x 100 mm	yes
Material group	metal
Height	298 mm
Width	212 mm
Depth	214 mm
Weight	1.07 kg
Height of packaging (single piece)	70 mm
Width of packaging (single piece)	220 mm
Depth of packaging (single piece)	220 mm
Package weight (single piece)	1 kg